A BWXT/Bechtel Enterprise

Document No. Y/DX-2525

A Generalized Finite Source Calibration Factor: A Natural Improvement to the Finite Source Correction Factor for Uranium Holdup Measurements

C. A. Gunn
R. B. Oberer
L. G. Chiang
R. N. Ceo

January 28, 2003

Prepared by the
Y-12 National Security Complex
P.O. Box 2009
Oak Ridge, TN 37831-8169
managed by
BWXT-Y12, L.L.C.
for the
U.S. DEPARTMENT OF ENERGY
under contract DE-AC05-00OR22800

Y-12 NATIONAL SECURITY COMPLEX

MANAGED BY
BWXT-Y12, L.L.C.
FOR THE UNITED STATES
DEPARTMENT OF ENERGY

DISCLAIMER

This report was prepared as an account of work sponsored by an agency of the United States Government. Neither the United States Government nor any agency thereof, nor any of their employees, makes any warranty, express or implied, or assumes any legal liability or responsibility for the accuracy, completeness, or usefulness of any information, apparatus, product, or process disclosed, or represents that its use would not infringe privately owned rights. Reference herein to any specific commercial product, process, or service by trade name, trademark, manufacturer, or otherwise does not necessarily constitute or imply its endorsement, recommendation, or favoring by the United States Government or any agency thereof. The views and opinions of authors expressed herein do not necessarily state or reflect those of the United States Government or any agency thereof.

COPYRIGHT NOTICE

The submitted manuscript has been authored by a subcontractor of the U. S. Government under contract DE-AC05-00OR-22800. Accordingly, the U. S. Government retains a paid-up, nonexclusive, irrevocable, worldwide license to publish or reproduce the published form of this contribution, prepare derivative works, distribute copies to the public, and perform publicly and display publicly, or allow others to do so, for U. S. Government purposes.

A Generalized Finite Source Calibration Factor: A Natural Improvement to the Finite Source Correction Factor for Uranium Holdup Measurements

Cynthia Gunn, Rick Oberer, Lisa Chiang and Robert Ceo

January 28, 2003

Abstract

This paper proposes refinements to the finite source correction factor[1] used in holdup measurements. Specifically it focuses on a more general method to estimate the average detector response for a finite source. This proposed method for the average detector response is based directly on the Generalized Geometry Holdup (GGH) assay method.

First, the finite source correction factor as originally proposed is reviewed in this paper. Following this review the GGH assay method is described. Lastly, a new finite area calibration factor based on GGH is then proposed for finite point and line sources. As an alternative to the direct use of the finite area calibration factor, finite source correction factors are also derived from this calibration factor. This new correction factor can be used in a manner similar to the finite source correction factor as currently implemented.

Contents

1 Current implementation of the finite source correction **2**

2 Review of the Generalized Geometry Holdup (GGH) calibration method **3**

3 Proposed generalized calibration factor, K_w **5**

4 Alternative finite source correction factor based on generalized calibration factor K_w **7**

5 Summary **10**

[1] P.A. Russo, T. R. Wenz, S.E. Smith and J.F. Smith, "Achieving Higher Accuracy in the Gamma-Ray Spectroscopic Assay of Holdup, LA-13699, September 2000.

1 Current implementation of the finite source correction

A finite source correction is currently in use to improve the accuracy of holdup measurements by taking into account the detector response for finite width line sources and finite dimension point sources. This correction has a number of advantages. First, in real life all line sources and point sources have a finite width. The finite source model therefore more closely resembles the real world than the model for ideal points and lines. In addition with lines and points converted into areas, the measured response can be corrected for material self-attenuation. The finite source model also reduces bias caused by detector position uncertainty. For example, imagine an ideal point source. Every real measurement will have the point source off center in a random fashion. These off-center measurements will always have a lower detector response than a more centered measurement.

The finite source correction factor as implemented in the HMS3 software has two shortcomings. First, the detector radial response is approximated by a Gaussian curve fit. Second, the average detector response for the finite line or point source is estimated by an overly-simplified trapezoidal approximation.

The HMS3+ software[2] adopts the suggestion[3] from the model that the detector radial response be fitted with a Gaussian curve. This choice of curve fit is too limiting. There is no physical reason that the detector radial response should resemble a Gaussian. It is merely fortuitous that the current collimator produces a radial response that superficially resembles a Gaussian shape. The ideal radial response is uniform rather than Gaussian.[4] It is therefore not unlikely that another collimator design would be adopted that more closely resembles this ideal rather than a Gaussian shape.

After the Gaussian approximation to the radial response is determined, it is used solely to determine the detector response at a distance $w_0/2$ from the center, where $w_0 = w\frac{r_0}{r}$, and w is the width of a finite line or diameter of a finite point. The width $w_0/2$ is shown in Figures 1. The assumed curve fit for the radial response is then implicitly changed from a Gaussian to a triangle, passing through the points $\frac{C}{C_0}(\frac{w_0}{2})$ and 1 at the center. In the current implementation of the finite source correction, one of two correction factors are applied to lines or points with a width of w. These correction factors are

$$CF_{\text{finite line}} = \frac{2}{1 + C(\frac{W_0}{2})}$$

for a line, and

$$CF_{\text{finite point}} = \left[\frac{2}{1 + C(\frac{W_0}{2})}\right]^2$$

for a point.

[2]In HMS3 the finite source correction is calculated with a separate program called Geometric Response Correction.

[3]The Gaussian approximation of the detector response is not required by the model. It is merely mentioned in the paper cited in Note 1.

[4]J.K. Sprinkle, Jr., R. Cole, M.L. Collins, S-T Hsue, P.A. Russo, R. Siebelist, H.A. Smith, Jr., R.N. Ceo, and S.E. Smith, Low-Resolution Gamma-Ray Measurements of Process Holdup., LA-UR-96-3482. October 1996.

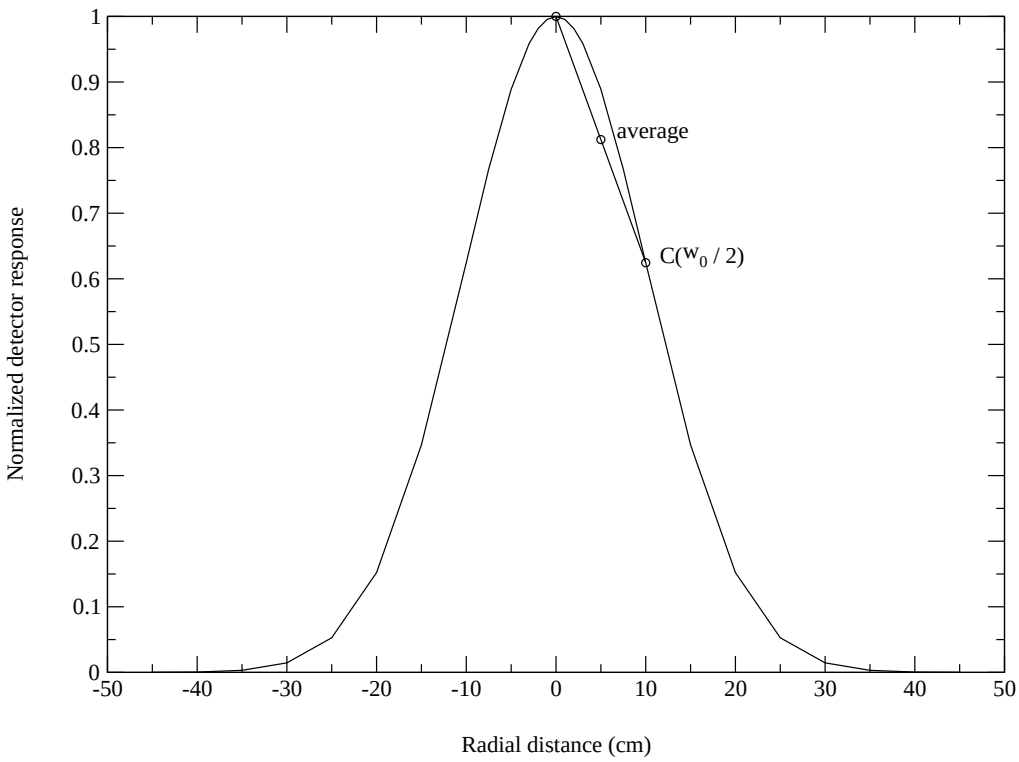

Figure 1: Graphical representation of the simplified average detector response implemented in the current finite source correction.

2 Review of the Generalized Geometry Holdup (GGH) calibration method

Rather than assuming trapezoidal or Gaussian radial responses, it would be more consistent to resort to the definitions in the GGH assay method. The formulas from GGH are summarized in Table 1. In the GGH scheme, the specific mass is shown on the first line of the table where C is the sample count and r is the distance between the sample and the detector. All counts, C, C_i, and C_0' are corrected for background and Compton continuum.

The three calibration factors K_x where the subscript x indicates a point, line, or area, are defined in the second line of Table 1, where m_0 is a well-characterized standard located at position 0, C_0' is the count from that source and r_0 is the distance from the face of the detector to the calibrated source. The parameters L and A are referred to as the effective line source length and effective area-source area and are defined on the next line of the table, where N is the number of calibration points for the radial response, s is the distance between these points, a_i is the incremental area of the annular ring at position i, and C_0 is the count at the center position from the same source used for all C_i. Note that C_0 and C_0' need not be the same. The

Table 1: Summary of the Generalized Geometry Holdup (GGH) method.

	Point	Line	Area
specific mass	$m_p(g) = K_p C r^2$	$m_l(g/cm) = K_l C r$	$m_a(g/cm^2) = K_a C$
calibration factor	$K_p = \frac{m_0}{C_0' r_0^2}$	$K_l = \frac{m_0}{L C_0' r_0}$	$K_a = \frac{m_0}{A C_0'}$
-	-	$L = \frac{2s}{C_0} \sum_{i=0}^{N} C_i - s$	$A = \frac{1}{C_0} \sum_{i=0}^{N} a_i C_i$
example	$K_p = 7.28 \times 10^{-05}$ $(g \cdot s/cm^2)$	$K_l = 1.16 \times 10^{-04}$ $(g \cdot s/cm^2)$	$K_a = 1.75 \times 10^{-04}$ $(g \cdot s/cm^2)$

distinction is made so that a stronger source can be used for the radial response, but a well-characterized standard used for the absolute detector response at position 0.

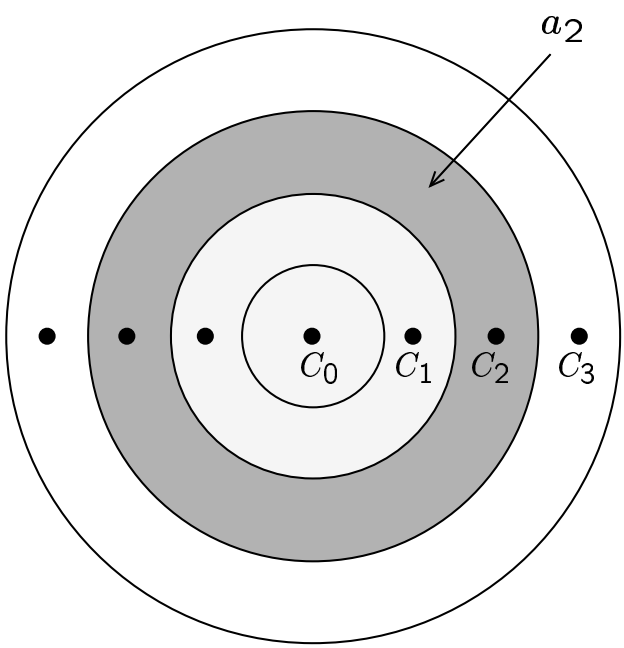

Figure 2: GGH representation of an area source.

One would expect that as the width of a point or line source increases to fill the detector field of view that the specific mass would be equivalent for the finite source and an areal source. An example will show that this is not the case. This example is from a calibration of MCA/Detector N302/HY-599 at Y-12 National Security Complex on August 29, 2000. Let W_0 represent the width of the detector total field of view at r_0.

For this example W_0 is 95 cm. The calibration factors for this detector are

$$\begin{aligned} K_p &= 7.28 \times 10^{-05}\ (g \cdot s/cm^2) \\ K_l &= 1.16 \times 10^{-04}\ (g \cdot s/cm^2) \\ K_a &= 1.75 \times 10^{-04}\ (g \cdot s/cm^2) \end{aligned}$$

Consider a large finite point source of mass m_0 which just fills the detector field of view. The area of this finite point is 7,088.2 cm^2. This mass at will produce counts C_m at $r_0 = 40$ cm. The calculated mass is $m_a = K_a C_m A_a$ for an area source. The correction factor from the model for a finite point source of this size is 4. Therefore the mass calculated as a point is $m_p = 4K_p C_m r_0^2$. The ratio of the masses calculated in these two ways is $\frac{m_a}{m_p} = \frac{K_a A_a}{4K_p r_0^2} = 2.66$. Clearly the correction factor underestimates large finite point sources.

Similarly, suppose a line source has both a length, L_l, and width of 95 cm. The correction factor for this line using the current method is 2. The area of this line is 9,025 cm^2. The ratio of the masses calculated as an area and a line is $\frac{m_a}{m_p} = \frac{K_a A_a}{2K_l r_0 L_l} = 1.79$. The discrepancy, although smaller than for a finite point, is significant.

3 Proposed generalized calibration factor, K_w

The comparison of finite lines and points to area sources implies a method for a finite source correction factor. A generalized calibration factor K_w, which is consistent with the GGH model can be used for finite lines and points. This calibration factor must be defined consistent with the area calibration factor K_a. Thus,

$$K_w = \frac{m_0}{A_w C_0'}$$

where the finite effective area-source area is

$$A_w = \frac{1}{C_0} \sum_{i=0}^{N'} a_i C_i.$$

The areas a_i of segments C_i are shown in Figure 2.

For a finite point source a_i is identical to that for an area source except when $i = N'$. On the $N'th$ ring the area will be somewhat less as shown as a_2 in Figure 3.

For a finite line source N' will equal N. This is because in the direction of the length of the line, the line always fills the detector field of view. The area a_i will be the same as that for an area source for the calibration points within $\pm w_0/2$. Outside of this width, a segment will be missing from the area. An example of this area is shown in Figure 4 as a_2.

The effective area a_i for a finite line of width w, can be calculated as follows:

$$a_i = \pi r_i^2 - 2s_i - \sum_{j=0}^{i-1} a_j$$

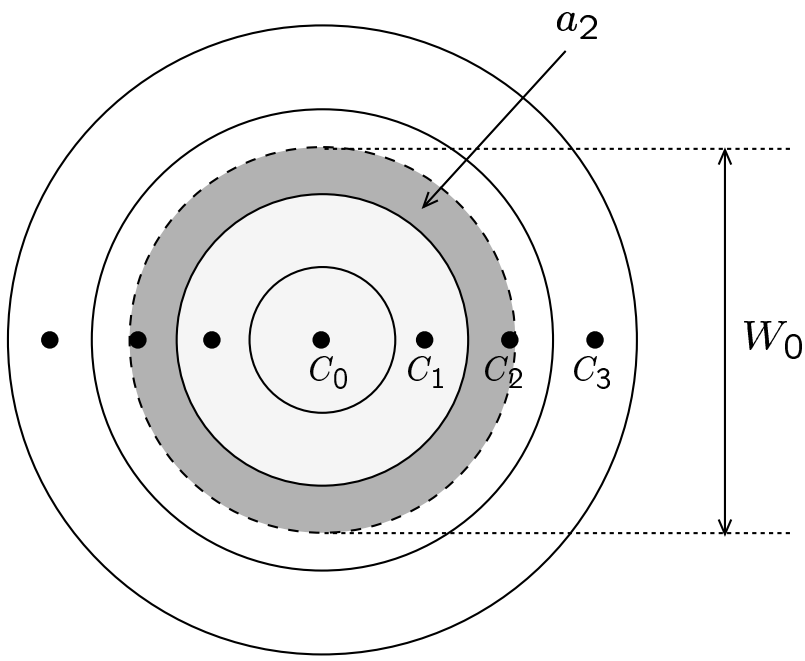

Figure 3: Finite point source of width w.

where s_i is the area of a circle segment.[5]

The finite area calibration constant depends on whether it is for a finite point or finite line. There are therefore two new calibration constants , $K_{w_0 p}$ and $K_{w_0 l}$, which depend on the parameter $w_0 = w\frac{r_0}{r}$. These calibration constants can be used directly to calculate the mass for a point source or the specific mass for a line source.

$$\begin{aligned} m_p(g) &= K_{w_0 p} C \pi \left(\frac{w_0}{2}\right)^2 \\ &= K_{w_0 p} \pi \left(\frac{r_0}{2}\right)^2 \left(\frac{w}{r}\right)^2 C \\ &= K_{wp} \left(\frac{w}{r}\right)^2 C \qquad \text{for a point source} \end{aligned}$$

$$\begin{aligned} m_l(g/cm) &= K_{w_0 l} C w_0 \\ &= K_{w_0 l} r_0 \frac{w}{r} C \\ &= K_{wl} \frac{w}{r} C \qquad \text{for a line source} \end{aligned}$$

Note that in the last step of each calculation a new calibration constant was used which incorporates constants and the factor r_0 into the calibration constant.

[5] The formula for the segment area is $s_i = r_i^2 \cos^{-1}\left(\frac{w_0}{2r_i}\right) - \frac{w_0}{2}\sqrt{r_i^2 - \left(\frac{w_0}{2}\right)^2}$.

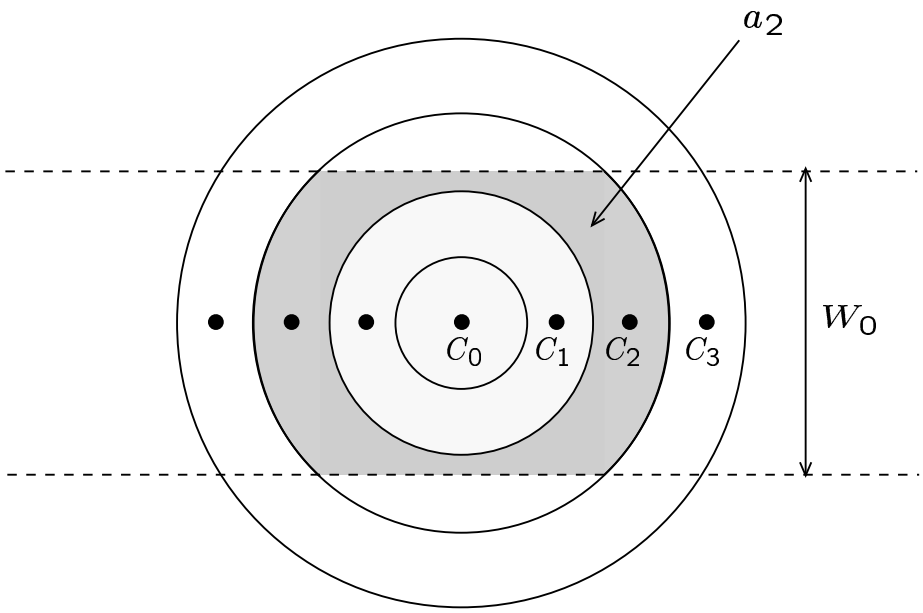

Figure 4: Finite line source of width w.

4 Alternative finite source correction factor based on generalized calibration factor K_w

An alternative to the finite area calibration constant K_w is a correction factor derived from K_w. This correction factor for a source of width w would be

$$CF_{\text{finite point}} = \frac{K_{w_0 p}\pi\left(\frac{w_0}{2}\right)^2}{K_p r_0^2}$$

for a finite point, and

$$CF_{\text{finite line}} = \frac{K_{w_0 l} w_0}{K_l r_0}$$

for a finite line.

A comparison of the proposed finite source correction factor with the old factor is shown in Figure 5 for a finite point and in Figure 6 for a finite line. The old correction factor is slightly overestimated below a w_0 of about 50 cm and then grossly underestimated. The old correction factor is better for a finite line source. However for a w_0 greater than 50 cm it also begins to grossly underestimate the correction needed.

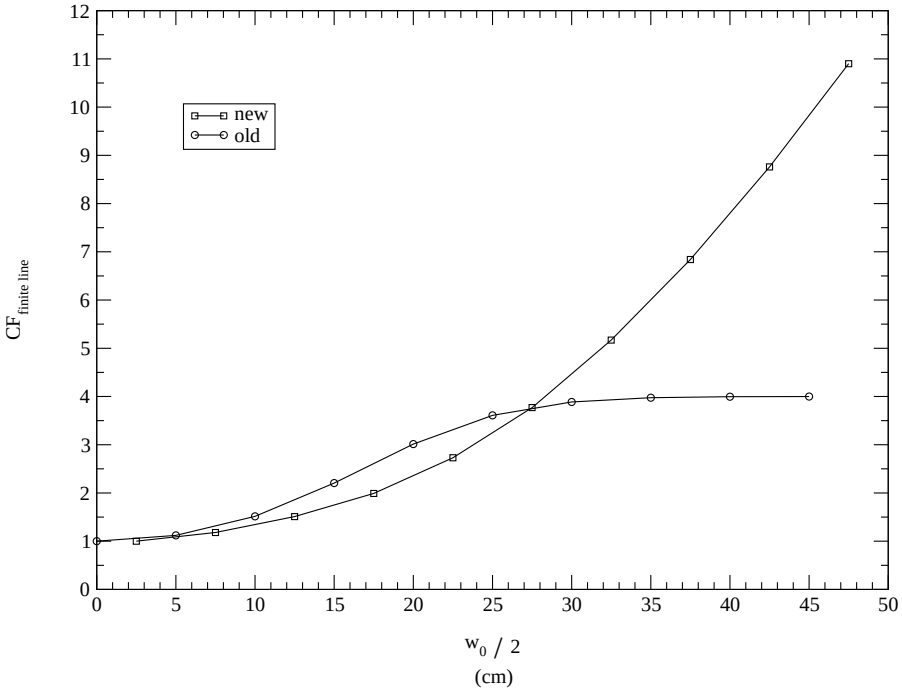

Figure 5: Comparison of the old finite source correction and the proposed finite source correction factors for a finite point source.

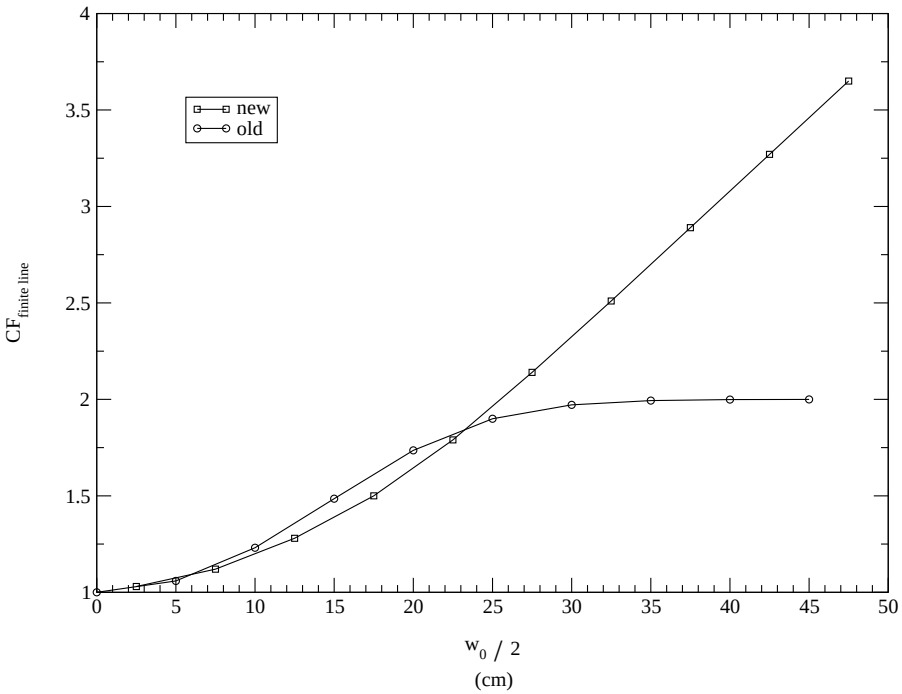

Figure 6: Comparison of the old finite source correction and the proposed finite source correction factors for a finite line source.

In practice it might be convenient to fit the finite source correction factors to a polynomial at calibration time for easy calculation later. This representation reduces both the data needed and calculation intensity at operation time. These polynomials for this example are

$$\begin{aligned} CF_{\text{finite point}} &= 0.0051\left(\frac{w_0}{2}\right)^2 - 0.0349\left(\frac{w_0}{2}\right) + 1 \\ R^2 &= 0.9992 \end{aligned}$$

for a point, and

$$\begin{aligned} CF_{\text{finite line}} &= 0.0009\left(\frac{w_0}{2}\right)^2 + 0.0163\left(\frac{w_0}{2}\right) + 1 \\ R^2 &= 0.9968 \end{aligned}$$

for a line.

5 Summary

A finite source can be calculated with either a uniform finite source calibration factor or with a correction factor derived therefrom applied to a point or line source approximation. Either the calibration factor or the correction factor can be reduced to a second order polynomial at calibration time for convenience. Either of these factors are derived directly from the GGH model.

References

[1] *In-Situ Assay of Enriched Uranium Residual Holdup.* NRC Regulatory Guide 5.37, Rev. 1. United States NRC, October 1983.

[2] P.A. Russo, T. R. Wenz, S.E. Smith, and J.F. Smith. Achieving higher accuracy in the gamma-ray spectroscopic assay of holdup. Technical Report LA-13699, Los Alamos National Laboratory, September 2000.

[3] S.E. Smith, K.A. Thompson, and R.N. Ceo. Holdup measurement system 3 (HMS3 Version 1.0). Technical Report Y/DK-1104, Y-12 National Security Complex, December 1997.

[4] J.K. Sprinkle, Jr., R. Cole, M.L. Collins, S-T Hsue, P.A. Russo, R. Siebelist, H.A. Smith, Jr., R.N. Ceo, and S.E. Smith. Low-resolution gamma-ray measurements of process holdup. Technical Report LA-UR-96-3482, Los Alamos National Laboratory, October 1996.